| REV | DESCRIPTION | DATE | CHGD | CHKD |
|---|---|---|---|---|

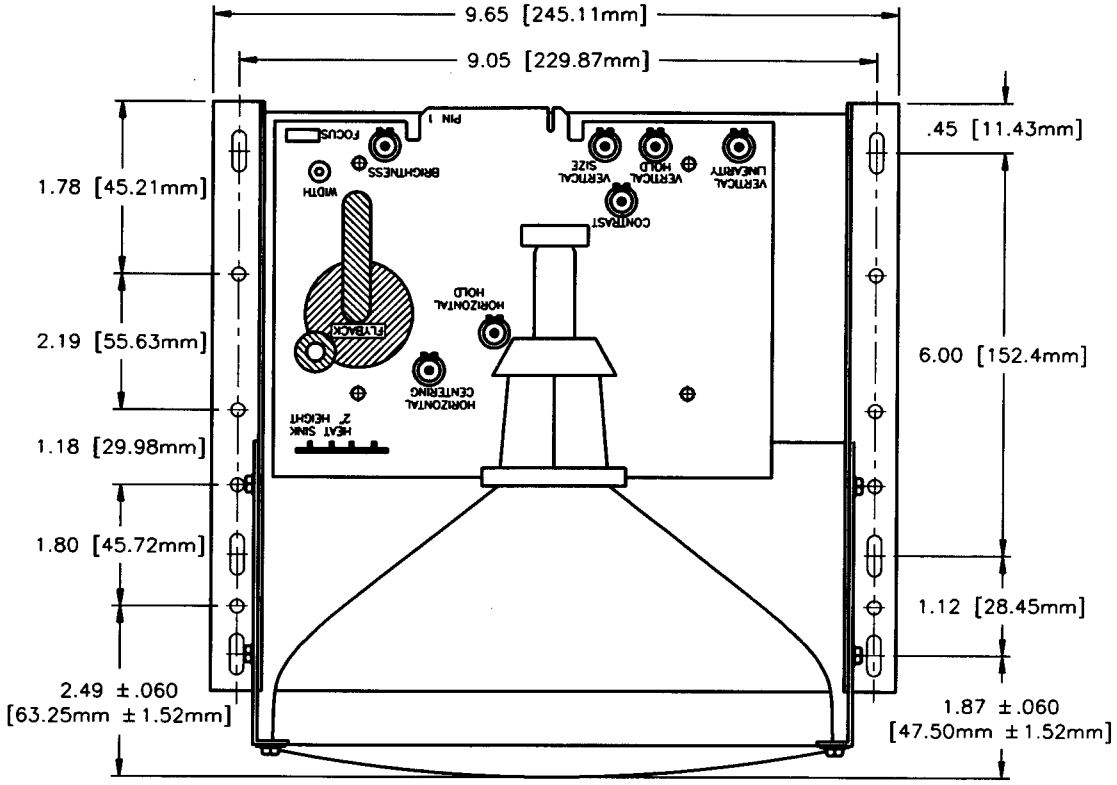


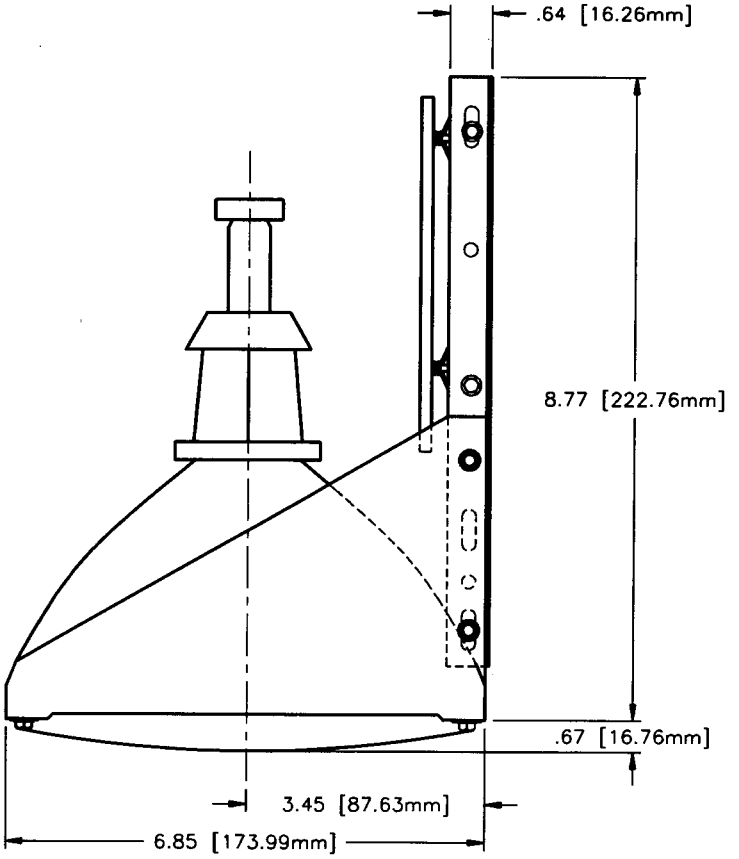


NOTES:
1. SLOTS .218 x .50
2. HOLES .187 DIA.

UNLESS OTHERWISE SPECIFIED DIMENSIONS ARE IN INCHES AND APPLY AFTER HEAT TREAT & PLATING
TOLERANCES ON: 2 PL. DEC. ±.01
3 PL. DEC. ±.005
ANGLE: ±2°

MATERIAL:

FINISH:

| APPROVALS | | DATE |
|---|---|---|
| DRAWN: | PDN | 01/16/86 |
| DESIGNED: | | |
| CHECKED: | | |
| MANUF. | | |
| Q.A. | | |
| ENGINEER | | |

**OMNI VISION INC.**
2000 Bloomingdale Road • Units 245-250 • Glendale Heights, IL 60139

TITLE: 9" MECHANICAL DETAIL (0° TILT)

SIZE: A | DRWG NO. 94-010 | REV 0

SCALE: NONE | USED ON | SHEET 1 OF 1